LPPFB

Pilot-operated Pressure Reducing/ Relieving Valve

DESCRIPTION

A cartridge-style pilot-operated pressure reducing/ relieving valve

OPERATION

Pilot-operated, pressure reducing/relieving valves reduce a high primary pressure at the inlet (port ②) to a constant reduced pressure at port ① , with a full-flow relief function from port ① to tank (port ③). Pressure at port ③ is directly additive to the valve setting at a 1:1 ratio and should not exceed 210 bar.

Recommended maximum inlet pressure is determined by the adjustment range. Ranges D, E, N, and Q are tested with a 2000 psi (140 bar) maximum differential between inlet and reduced pressure.
Ranges A, B, and H are tested with a 3000 psi (210 bar) maximum differential between inlet and reduced pressure.
Ranges C and W are tested with 5000 psi (350 bar) of inlet pressure.

SYMBOL

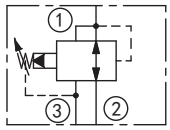

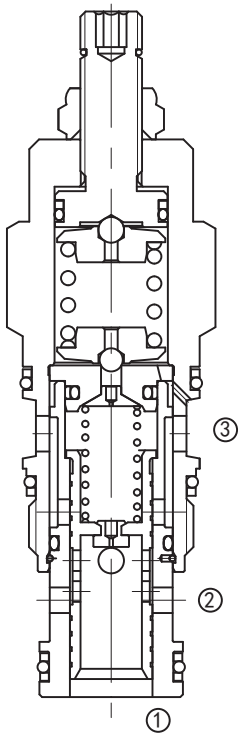

SPECIFICATIONS

Max.Operating Pressure	350bar
Flow	See PRESSURE DROP VS.FLOW graph.
Standard Spring Ranges	A: 7-210bar，preset：14bar
	B: 3.5-105bar，preset：14bar
	N: 4- 55bar，preset：14bar
	Q: 4- 28bar，preset：14bar
	W: 10.5-315bar，preset：14bar
Additional Options	D: 1.7-55bar，preset：14bar
	E: 1.7-28bar，preset：14bar
	H: 2-210bar，preset：14bar
	J : 1.7-105bar，preset：14bar
	K: 5-105bar，preset：14bar
	S: 1.7-14bar，preset：7bar
Temperature	-40ºF to +250ºF (-40 ºC to +120 ºC)
Filtration	See page N-1
Fluids	Mineral-based fluids with viscosities of 7.4 to 420 cSt.
Cavity	T-2A, See page M-6
Housing Material	Steel & Ductile iron rated to 350Bar

PRESSURE DROP VS.FLOW

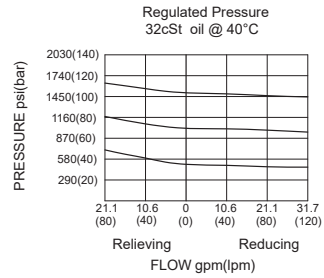

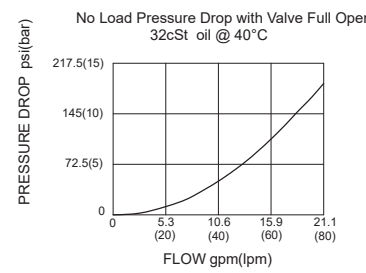

TO ORDER

LPP F B – * * * – * *

1 2 3 4 5 6

1 Function
LPP=Pilot-operated Pressure Reducing/Relieving Valve

2 Capacity
F=80L/min

3 Control
L= Standard screw Adjustment

4 Spring Ranges
A=100-3000psi(7-210bar)
Preset:200psi(14bar)
W=150-4500psi(10.5-315bar)
Preset:200psi(14bar)
B=50-1500psi(3.5-105bar)
Preset:200psi(14bar)
N=60-800psi(4-55bar)
Preset:200psi(14bar)
Q=60-400psi(4-28bar)
Preset:200psi(14bar)

5 Seal Kits
N= Buna N
V=Viton

6 Port Size
Omit=None
8T=SAE8
10T=SAE10
3G=G 3/8
4G=G 1/2

※See page K-23 for detail of housing
※Other port sizes are available

E

INSTALLATION DIMENSIONS

Unit=Millimeters

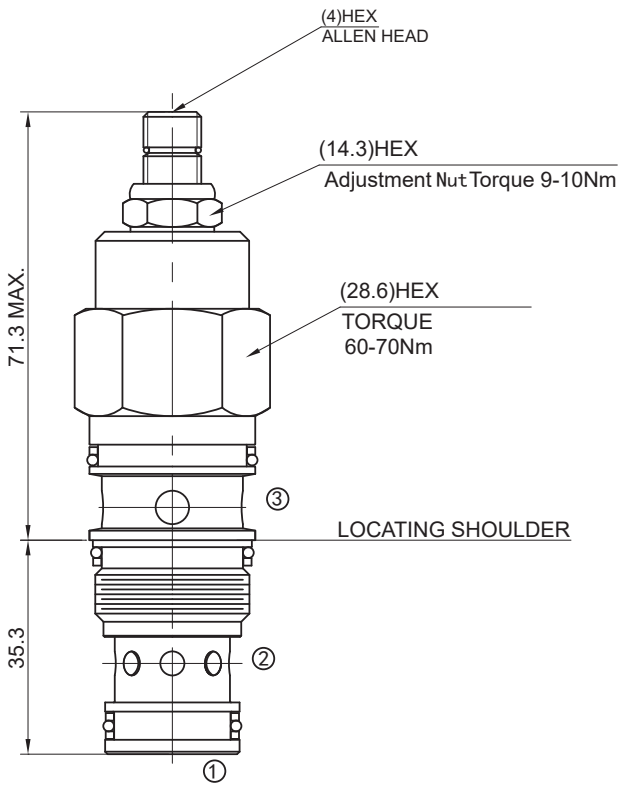

Additional Options
D=25-800psi(1.7-55bar)
Preset:200psi(14bar)
E=25-400psi(1.7-28bar)
Preset:200psi(14bar)
H=30-3000psi(2-210bar)
Preset:200psi(14bar)
J=25-1500psi(1.7-105bar)
Preset:200psi(14bar)
K=75-1500psi(5-105bar)
Preset:200psi(14bar)
S=25-200psi(1.7-14bar)
Preset:100psi(7bar)