LSV2-08-2 NOS
二位二通电磁阀　常开型

Normally-open,Two Way,Two-position,spool-type Cartridge Solenoid Valve

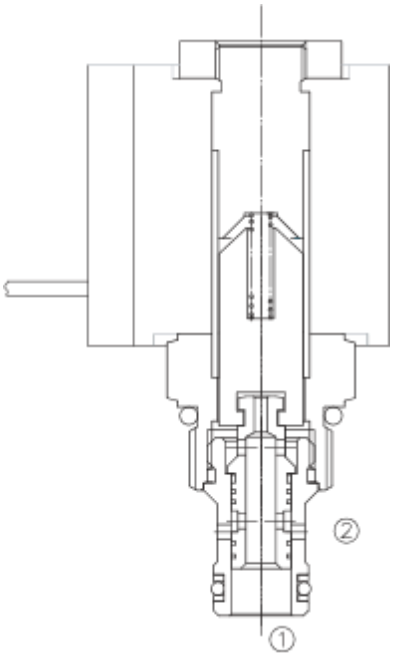

OPERATION

When de-energized,the valve allows flow in both directions.
When energized,the cartridge's spool shifts to block flow in either direction.

断电时，此阀允许油液双向流动；
通电后，阀芯移动，从而双向截止油液流动。

Operation of Manual Override Option: To override, push button in, twist counterclockwise and release. In this position, valve will remain close in a detented condition.

To return to normal operation, push button in, twist clockwise and release. Override will be detented in this position.

先推进按钮，然后逆时针方向旋转，释放。此时阀口关闭；
返回到常态，推进按钮，然后顺时针方向旋转，释放。
旋钮将被固定在这位置。

SYMBOL

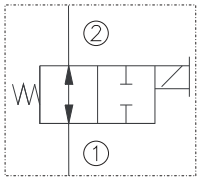

FEATURES
特性

- Both ports may be fully pressurized. 两油口都可接压力腔。
- Continuous-duty solenoid. 可持续工作的电磁铁。
- Hardened precision spool and sleeve for long life. 长寿命的阀。
- Efficient wet-armature construction. 高效能的电磁铁结构。
- Optional coil voltages and terminations. 可选择的线圈电压和终端。
- Manual override option. 可带手动卸荷。
- Industry common cavity. 工业通用插孔。
- Compact size. 紧凑的结构。

PRESSURE DROP VS. FLOW

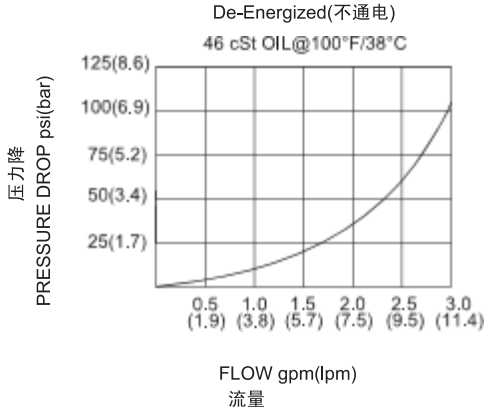

SPECIFICATIONS
技术参数

Operating Pressure（工作压力）: 207 Bar
Flow（流量）: See PRESSURE DROP VS. FLOW graph.
Internal Leakage（内泄漏）:82cc /min. max. at 207 Bar
Temperature(温度): -22°F to +250°F (-30°C to +120°C)
Coil Rating（线圈电压范围）:
Continuous from 90% to 110% of rated voltage.
Recommended Filtration（推荐的过滤网）: ISO 16/12
Cavity（插孔）: 08-2, see page 362
Body Material（阀块材料）: Anodized 6061T6 aluminum alloy rated at 207 Bar
6061-T6铝，允许使用最大压力207Bar.

INSTALLATION DIMENSIONS

COIL MUST BE INSTALLED WITH LETTER UP
安装线圈时, 字母必须朝上

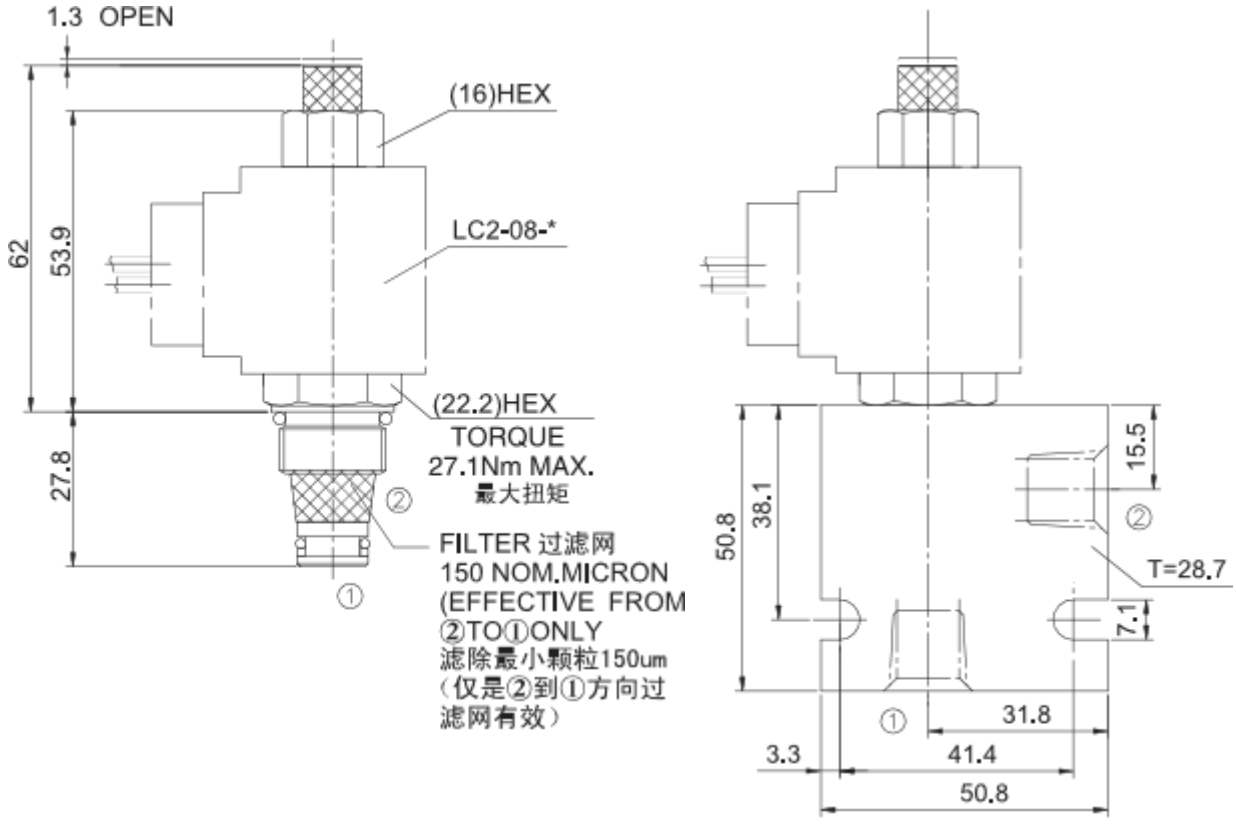

Unit=Millimeters

TO ORDER

LSV2 - 08 - 2 NO S - * - ** -**

- SOLENOID VALVE 电磁阀
- CAVITY 插 孔
- FLOW PATH 流道类型
- NORMALLY OPEN 常 开
- SPOOL 滑阀型
- M=Manual Override 手动卸荷 (Omit for standard 省略为常规)
- BODY PORTING 阀块油口
  - 3N=3/8PTF
  - 4T=SAE4
  - 6T=SAE6
  - Other Porting is Available
  - 其它螺纹油口也是可选择的
  - (Omit for Cartridge only 省略为不带阀块)
- COIL CONNECTION 线圈连接
  - D= Double Lead 双线
  - S= Single Lead 单线
  - H= Hirschmann 三插
  - C= Conduit 带嵌套
  - ER= Deutsch Connector (Water-proof Coil) 德意志插座(防水线圈)
  - E= Single Stud 单接线柱
  - B= Double Spade 双插
- VOLTAGE 电压
  - 1=12V Volt DC
  - 2=24V Volt DC
  - 3=110V Volt AC
  - 4=220V Volt AC
  - 5=10V Volt DC
  - 7=48V Volt DC
  - 8=24V Volt AC